Appendix E

Sample ALREMP Forms

FIG #	SUBJECT	PAGE
E-1	Catapult Pre-Operational Data (Sheet 1 of 2)	E-2
E-2	Catapult Pre-Operational Data (Sheet 2 of 2)	E-3
E-3	Catapult Post-Operational Data	E-4
E-4	RRE Traverse Carriage Slipper Clearances	E-5
E-5	Roto Launching Valve Dry Cycle Data (Sheet 1 of 2)	E-7
E-6	Roto Launching Valve Dry Cycle Data (Sheet 2 of 2)	E-8
E-7	Water Brake and Piston Assembly Data (Sheet 1 of 2)	E-9
E-8	Water Brake and Piston Assembly Data (Sheet 2 of 2)	E-10
E-9	Shuttle and Connector Wear Data	E-11
E-10	Hydraulic Pump Performance Data	E-12
E-11	Hydraulic Fluid History Report	E-13
E-12	Launching Valve Low Pressure Actuation	E-14
E-13	Arresting Gear Pre-Operational Data	E-15
E-14	Arresting Gear Post-Operational Data	E-16
E-15	High-Speed Spacer Wear Data	E-17
E-16	Cable Guide Wear Data	E-18
E-17	CROV Drive System Pulley Wear Data	E-19
E-18	Anchor Damper Slipper Clearances	E-20
E-19	Crosshead Slipper Clearances	E-21
E-20	Sheave Damper Slipper Clearances	E-22
E-21	Engine Sheave Wear Data	E-23
E-22	Sheave Wear Data	E-24
E-22	Fresnel Lens, MK 6 MOD 3 Alignment, Stabilization and Pole Check Data (Sheet 1 of 5)	E-25
E-23	Fresnel Lens, MK 6 MOD 3 Alignment, Stabilization and Pole Check Data (Sheet 2 of 5)	E-26
E-24	Fresnel Lens, MK 6 MOD 3 Alignment, Stabilization and Pole Check Data (Sheet 3 of 5)	E-27
E-25	Fresnel Lens, MK 6 MOD 3 Alignment, Stabilization and Pole Check Data (Sheet 4 of 5)	E-28
E-26	Fresnel Lens, MK 6 MOD 3 Alignment, Stabilization and Pole Check Data (Sheet 5 of 5)	E-29
E-28	IFLOLS, MK 13 MOD 0 Pole Check Data/ LSO-IFLOLS Pre-Operational Data	E-30

CATAPULT PRE-OPERATIONAL DATA

CATAPULT NO. _____ DATE _____ TIME_____

CONSOLE/ICCP_____

DECKEDGE/ICCS_____

RETRACTION ENGINE_____

WATER BRAKES_____

NOSE GEAR LAUNCH_____

JBD_____

FLIGHT DECK_____

CENTER DECK_____

CAT ELECTRICIAN_____

STEAM PRESS. _____ PSI TEMP. _____ °F

RECEIVER WATER LEVEL _____ IN.

HYD. PRESS. _____ PSI TEMP. _____ °F

GRAVITY TANK LEVEL _____ GAL.

LUBE OIL TANK LEVEL _____ GAL.

S/P PHONES UP _____ DOWN_____

JBD WATER PRESS. _____ PSI

STEAM SMOTHER UP _____ DOWN_____

SAFETY LIGHTS UP _____ DOWN_____

MEGOHMS: LL1 _____ LL2 _____ F/S_____

WATER BRAKE DATA

WATER LEVEL _____ IN.; TEMP _____ °F

TANK SKIMMED YES _____ NO

SENSORS (OPEN) _____ PSI

SENSORS (CLOSE) _____ PSI

	ALPHA PUMP	BRAVO PUMP
DISCHARGE	_____PSI	_____ PSI
ELBOW	_____PSI	_____ PSI
VACUUM	_____PSI	_____ PSI

BLOWTHROUGH NO LOAD DATA

CSV	CLOCK #1 TIME	CLOCK #2 TIME	ELONG. IN/OUT	END SPEED
100	_____	_____	_____/_____	_____
100	_____	_____	_____/_____	_____
100	_____	_____	_____/_____	_____
100	_____	_____	_____/_____	_____

CLOCK #1 ALLOWABLE RANGE _____ TO _____

CLOCK #2 ALLOWABLE RANGE _____ TO _____

CLOCK #2 MARGINAL RANGE _____ TO _____

NOTE: FOR STANDARD NO LOADS, ENTER ONLY DATA REQUIRED. DISREGARD CLOCK RANGE DATA

Catapult Pre-Operational Data (Sheet 1 of 2)

Figure E-1. Catapult Pre-Operational Data (Sheet 1 of 2)

DECK TENSIONER DATA

DYNO FORCE _____ _____ _____

HYD PRESSURE _____ HIGH_____ LOW_____

SUSPEND SWITCHES COC_____ M/C_____ CCP_____ W/B_____ PRI-FLY _____

BOLTS	RETAINER RAILS	LOCKING KEYS	WATER BRAKE PLATE	FDNGL PLATE	WING VOID COVERS
NUMBER MISSING					

CAT CAPTAIN _____ **MAINT. CHIEF** _____

CAT CHIEF _____ **MAINT. OFFICER** _____

Catapult Pre-Operational Data (Sheet 2 of 2)

Figure E-2. Catapult Pre-Operational Data (Sheet 2 of 2)

CATAPULT POST-OPERATIONAL DATA

CATAPULT NO. _____ DATE _____ TIME_____

CONSOLE/CCP_____

DECKEDGE/ICCS_____

RETRACTION ENGINE_____

WATER BRAKES_____

FDNGL_____

JBD_____

FLIGHT DECK_____

CENTER DECK_____

CAT ELECTRICIAN_____

CATAPULT AIRCRAFT SHOTS TODAY _____

CATAPULT NO-LOAD SHOTS TODAY _____

STRIP TENSIONERS

INBD _____ IN. OUTBD _____ IN.

WATER BRAKES

WATER LEVEL _____ IN. OIL _____ IN.

OIL LEVEL

OIL LEVEL_____ GAL. USED TODAY _____GAL.

LUBE OIL ADDED _____GAL.

LAUNCHING ACCESSORY DATA

HOLDBACK BAR	SERIAL NUMBER	SHOTS TODAY	SHOTS UNTIL PMS	TOTAL SHOTS	STATUS (UP/DOWN)
E-2/EA-6B/C-2					
E-2/EA-6B/C-2					
F-14					
F-14					
F/A-18					
F/A-18					
F/A-18E/F					
F/A-18E/F					
S-3					
S-3					

RELEASE ELEMENTS ON HAND: A-6 _____ S-3 _____

PMS COMPLETED THIS DATE:

CAT CAPTAIN _____ **MAINT. CHIEF**_____

CAT CHIEF _____ **MAINT. OFFICER**_____

Figure E-3. Catapult Post-Operational Data

CATAPULT MAINTENANCE ACTION

CATAPULT NO. _____ DATE _____

JSN _____

SHOT NO. _____ SHOTS SINCE LAST INSP._____

RRE TRAVERSE CARRIAGE SLIPPER CLEARANCES

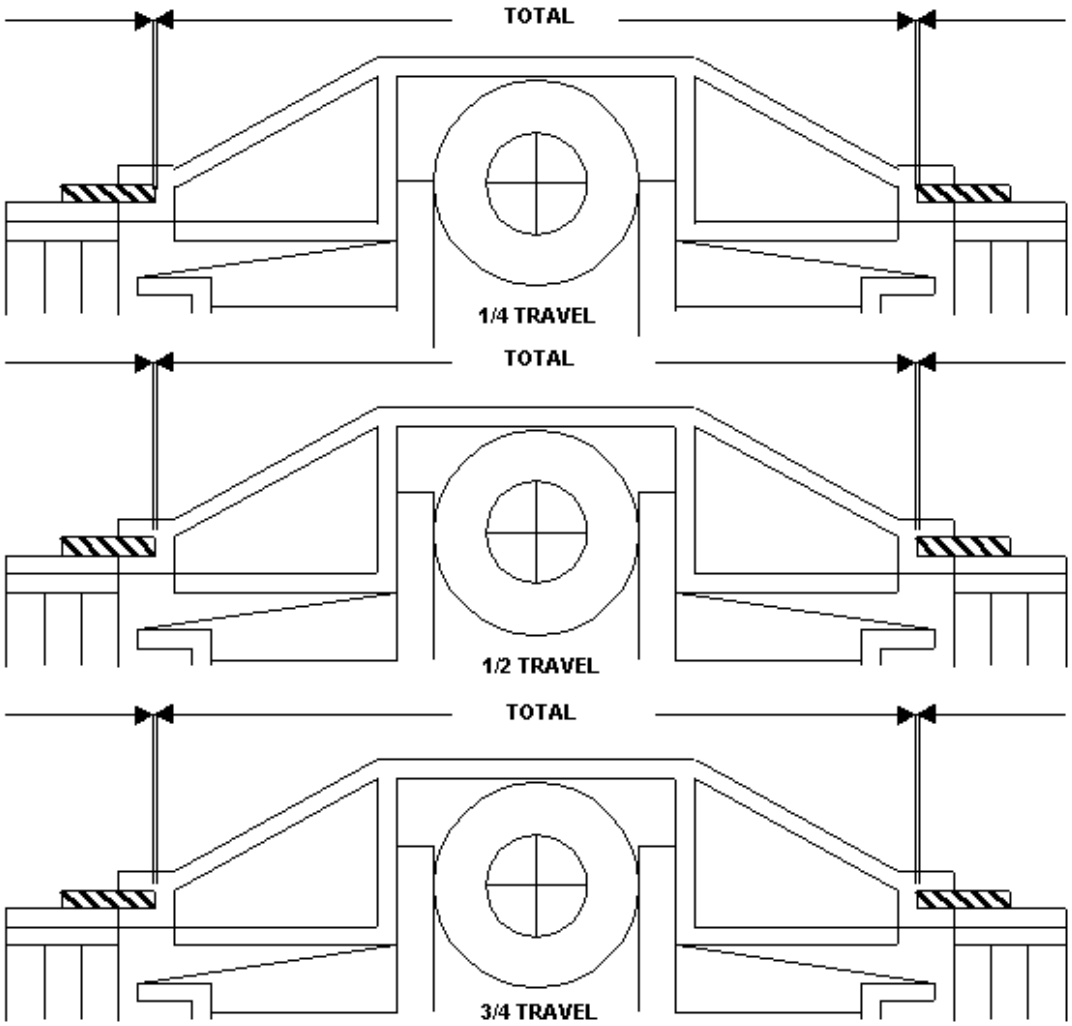

REMARKS:

MAINT MAIN _____ W/C SUPERVISOR _____

Q/A INSPECTOR _____ MAINT CHIEF / OFFICER _____

Figure E-4. RRE Traverse Carriage Slipper Clearances

CATAPULT MAINTENANCE ACTION

CATAPULT NO. _____ DATE _____

JSN _____

SHOT NO. _____ SHOTS SINCE LAST INSP._____

ROTO LAUNCHING VALVE DRY CYCLE DATA

DRY CYCLE COMPARISON (NORMS)

DATE TESTED _____ LV TEMP _____ °F HYD PRESS _____ PSI HYD TEMP _____ °F

CSV SETTING	50	100		150		250		300	
CLOCK TIMES	1 _____	1 _____	2 _____	1 _____	2 _____	1_____	2 _____	1 _____	2 _____

DRY CYCLE AVERAGES

DATE TESTED _____ LV TEMP _____ °F HYD PRESS _____ PSI HYD TEMP _____ °F

CLOCK TIMES (INCREASING CSV)

CYCLE	CSV 050	CSV 100		CSV 150		CSV 250		CSV 300	
	CLK 1	CLK 1	CLK 2	CLK 1	CLK 2	CLK 1	CLK 2	CLK 1	CLK 2
1									
2									
3									
4									
5									
AVG									

CLOCK TIMES (DECREASING CSV)

(NOT TO BE USED FOR ESTABLISHING NORMAL DRY CYCLE CLOCK TIMES)

CYCLE	CSV 300		CSV 100		CSV 150		CSV 250		CSV 050
NO.	CLK1	CLK 2	CLK 1	CLK 2	CLK 1	CLK 2	CLK 1	CLK 2	CLK 1
1									
2									
3									
4									
5									
AVG									

Figure E-5. Roto Launching Valve Dry Cycle Data (Sheet 1 of 2)

REMARKS: (INCLUDE REASON FOR ESTABLISHING NEW NORMS, IF APPLICABLE)

MAINT MAN _____ W/C SUPERVISOR _____

Q/A INSPECTOR _____ MAINT. CHIEF/OFFICER _____

Figure E-6. Roto Launching Valve Dry Cycle Data (Sheet 2 of 2)

CATAPULT MAINTENANCE ACTION

CATAPULT NO. _____ DATE _____

JSN_____ PMS BEING PERFORMED _____

SHOT NO. _____ SHOTS SINCE LAST INSP._____

WATER BRAKE AND PISTON ASSEMBLY DATA

FOOTPAD CLEARANCES

AFT FWD

NOTE: ENTER ACTUAL MEASUREMENTS WHEN INSTALLING CYLINDERS. WHEN CHECKING ALIGNMENT AS PER MRC, ONLY ENTER X AT POINTS OF CONTACT.

CHOKE RING MEASUREMENTS

CHOKE TO ANULUS GAP (MAX):

PORT _____ STBD _____

CHOKE RING ID (75º TEMP CORRECTION):

NOTE: ID MEASUREMENT REQUIRED ONLY IF NO-GO GAGE PASSES THROUGH

NO-GO GAGE

	PORT GO/NO-GO	STBD GO/NO-GO
	PORT	STBD
HORIZONTAL	_____	_____
VERTICAL	_____	_____
SUM	_____	_____

PORT BUTTRESS CLEARANCE STBD

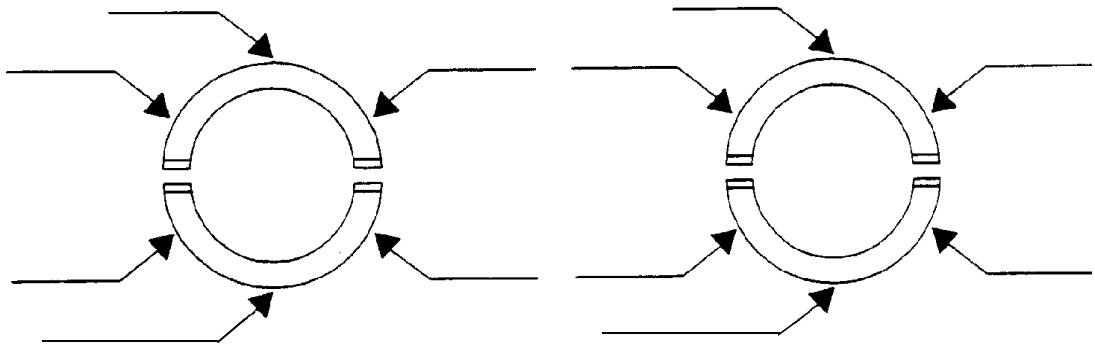

MAINT. MAN _____ W/C SUPERVISOR _____

Q/A INSPECTOR _____ MAINT. CHIEF/OFFICER _____

Figure E-7. Water Brake and Piston Assembly Data (Sheet 1 of 2)

CATAPULT MAINTENANCE ACTION

CATAPULT NO._____ DATE_____

JSN_____ PMS BEING PERFORMED _____

SHOT NO. _____ SHOTS SINCE LAST INSP._____

WATER BRAKE AND PISTON ASSEMBLY DATA

TELESCOPE CLEARANCE

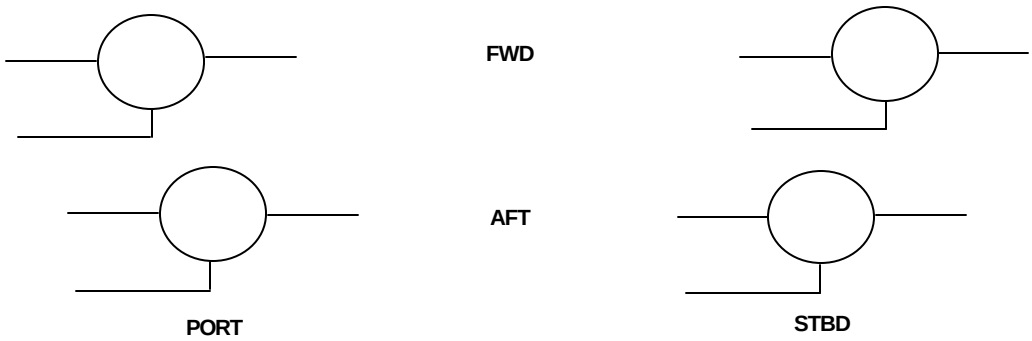

NOTE: FOR AFT 6 O'CLOCK CLEARANCE, USE AVERAGE OF 5 AND 7 O'CLOCK READINGS

DEFLECTOR RING TO STRIKER RING CLEARANCE

PORT _____ STBD _____

NOTE: BUTTRESS, TELESCOPE AND STRIKER RING READINGS ARE REQUIRED ONLY AT INSTALLATION AND WHEN NEEDED FOR TROUBLESHOOTING WEAR OR ALIGNMENT PROBLEMS.

PISTON DIAMETER

PORT		STBD	
1/7 O'CLOCK	_____ IN.	1/7 O'CLOCK	_____ IN.
11/5 O'CLOCK	_____ IN.	11/5 O'CLOCK	_____ IN.

PISTON GUIDE WEAR

CYLINDER WALL TO DEFLECTOR RING CLEARANCES

	6 O'CLOCK	11 O'CLOCK	1 O'CLOCK
PORT	_____ IN.	_____ IN.	_____ IN.
STBD	_____ IN.	_____ IN.	_____ IN.

NOTE: TAKE 11 O'CLOCK AND 1 O'CLOCK READINGS WITH PISTON GUIDE JACKED UP FLUSH WITH INSIDE DIAMETER OF CYLINDER.

REMARKS:

MAINT. MAN _____ **W/C SUPERVISOR** _____

Q/A INSPECTOR _____ **MAINT. CHIEF/OFFICER** _____

Figure E-8. Water Brake and Piston Assembly Data (Sheet 2 of 2)

CATAPULT MAINTENANCE ACTION

CATAPULT NO. _____ **DATE**_____

JSN_____

SHOT NO. _____ **SHOTS SINCE LAST INSP.**_____

SHUTTLE AND CONNECTOR WEAR DATA

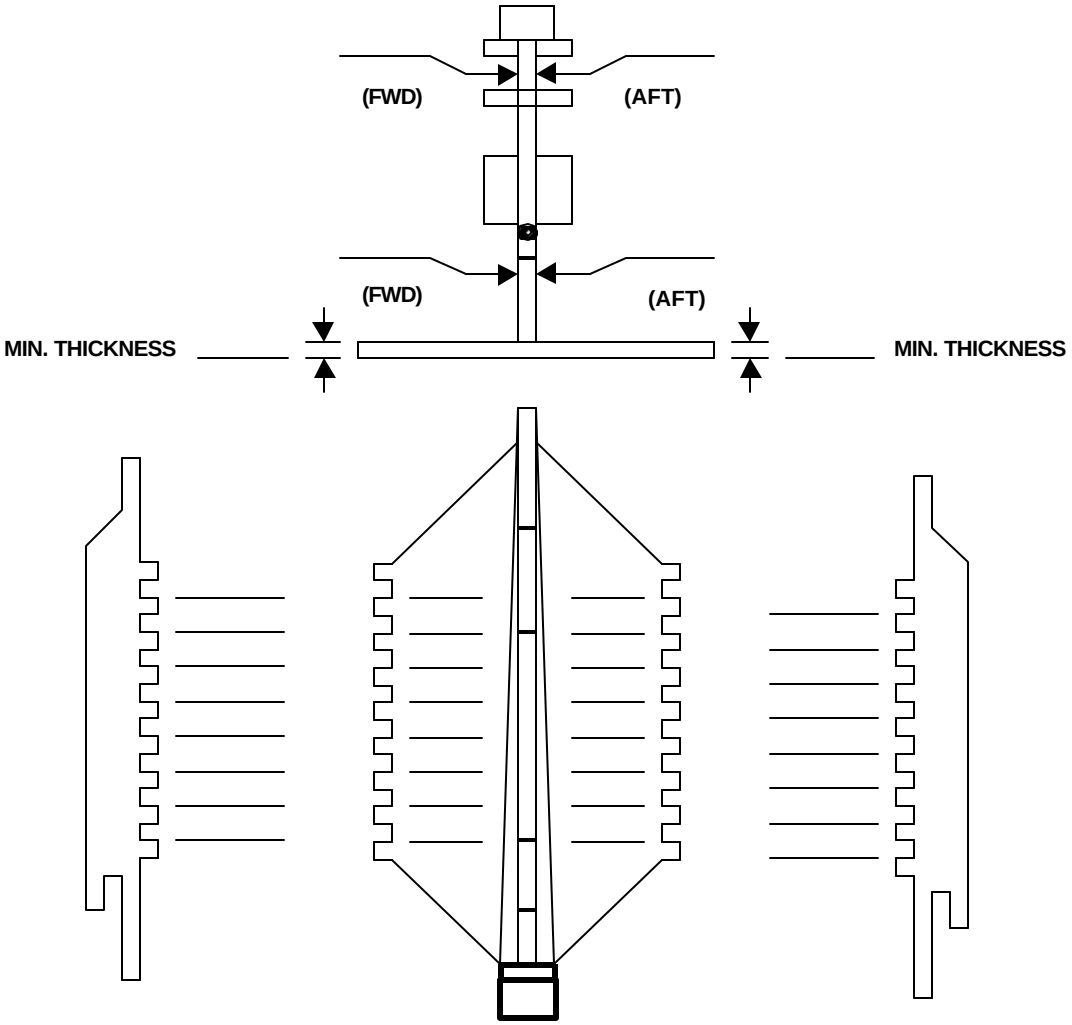

TOTAL SHOTS:	SHUTTLE _____	CONNECTORS	L EFT _____	RIGHT _____
CONTRACT NO.:	SHUTTLE _____	CONTRACT NO.	LEFT _____	
SERIAL NO.	SHUTTLE _____	CONTRACT NO.	RIGHT_____	

REMARKS:

MAINT. MAN _____ **W/C SUPERVISOR** _____

Q/A INSPECTOR _____ **MAINT. CHIEF/OFFICER** _____

Figure E-9. Shuttle and Connector Wear Data

CATAPULT MAINTENANCE ACTION

CATAPULT NO. _____ DATE _____

JSN_____

SHOT NO. _____ SHOTS SINCE LAST INSP._____

HYDRAULIC PUMP PERFORMANCE DATA

PUMP A

OUTPUT _____ RELIEF VALVE SETTING _____ PSI

PUMP B

OUTPUT _____ RELIEF VALVE SETTING _____ PSI

PUMP C

OUTPUT _____ RELIEF VALVE SETTING _____ PSI

REMARKS:

MAINT. MAN _____ **W/C SUPERVISOR** _____

Q/A INSPECTOR _____ **MAINT. CHIEF/OFFICER** _____

Figure E-10. Hydraulic Pump Performance Data

CATAPULT MAINTENANCE ACTION

CATAPULT NO. _____ DATE _____

JSN _____

SHOT NO. _____ SHOTS SINCE LAST INSP._____

HYDRAULIC FLUID HISTORY REPORT

FLUID SAMPLE DATA

SAMPLE SERIAL NO _____

SYSTEM CAPACITY _____ GAL.

FLUID LEVEL _____ GAL.

FLUID HISTORY DATA

LAST COMPLETE FLUID SHOT NO. _____

REPLACEMENT DATE: _____

WATER ADDED

DATE _____	DATE _____	DATE _____
SHOT NO. _____	SHOT NO. _____	SHOT NO. _____
GALS. _____	GALS. _____	GALS _____

FLUID ADDED

DATE _____	DATE _____	DATE _____
SHOT NO. _____	SHOT NO. _____	SHOT NO. _____
GALS. _____	GALS. _____	GALS. _____

REMARKS:

MAINT. MAN _____ **W/C SUPERVISOR** _____

Q/A INSPECTOR _____ **MAINT. CHIEF/OFFICER** _____

Figure E-11. Hydraulic Fluid History Report

CATAPULT MAINTENANCE ACTION

CATAPULT NO. _____ DATE _____

JSN _____

SHOT NO. _____ SHOTS SINCE LAST INSP. _____

LAUNCHING VALVE LOW PRESSURE ACTUATION

LV TEMP. _____ °F HYD. FLUID TEMP. _____ °F

OPENING STROKE DATA

INITIAL PRESSURE	PRESSURE INCREASES AMOUNT	PRESSURE INCREASES DISTANCE	FINAL PRESSURE	OPENING TIME

CLOSING STROKE DATA

INITIAL PRESSURE	PRESSURE INCREASES AMOUNT	PRESSURE INCREASES DISTANCE	FINAL PRESSURE	CLOSING TIME

REMARKS:

MAINT. MAN _____ **W/C SUPERVISOR** _____

Q/A INSPECTOR _____ **MAINT. CHIEF/OFFICER** _____

Figure E-12. Launching Valve Low Pressure Actuation

ARRESTING GEAR PRE-OPS DATA

DATE _____ **TIME**_____

PRE-OP COMPLETED

ENGINE NO. 1 _____ ENGINE NO. 3 _____

ENGINE NO. 2 _____ ENGINE NO. 4 _____

BARRICADE ENGINE _____ BARRICADE POWER PACK _____

SHEAVE DAMPERS 1 **P**_____ **S**_____ SHEAVE DAMPERS 3 **P**_____ **S**_____

SHEAVE DAMPERS 2 **P**_____ **S**_____ SHEAVE DAMPERS 4 **P**_____ **S**_____

BB SHEAVE DAMPERS **P**_____ **S**_____ BELOW DECKS P.O. _____

FLIGHT DECK EQUIPMENT

PENDANT ENGINES _____

LSO STATION _____

DECKEDGE STATION _____

BARRICADE _____ Q/A _____

TOPSIDE P.O. _____

PRIMARY FLIGHT CONTROL _____

TOPSIDE

POWER PACK FLUID LEVEL POWER ON _____ AIR PRESSURE _____

OPERATOR _____ 2 AIR GUNS _____ TOPSIDE GEAR _____

TOOLS _____ OPERATOR _____

NUM. OF MISSING BOLTS	RETRACTABLE SHEAVES		IMPACT PAD RAILS		WIRE SUPPORTS		TERMINAL TO SHEAVE		X-STOP
	PORT	STBD	PORT	STBD			PORT	STBD	
A/G #1									
A/G #2									
A/G #3									
A/G #4									
BARRICADE ENGINE									

A/G LPO _____ **A/G CPO** _____

MAINT. CHIEF/ OFFICER _____

Figure E-13. Arresting Gear Pre-Operational Data

ARRESTING GEAR POST-OPS DATA

DATE _____ **TIME** _____

POST-OP COMPLETED

ENGINE NO. 1 _____ ENGINE NO. 3 _____

ENGINE NO. 2 _____ ENGINE NO. 4 _____

BARRICADE ENGINE _____ BARRICADE POWER PACK _____

SHEAVE DAMPERS 1 **P**_____ **S**_____ SHEAVE DAMPERS 3 **P**_____ **S**_____

SHEAVE DAMPERS 2 **P**_____ **S**_____ SHEAVE DAMPERS 4 **P**_____ **S**_____

BB SHEAVE DAMPERS **P**_____ **S**_____ BELOW DECKS P.O. _____

FLIGHT DECK EQUIPMENT

PENDANT ENGINES _____

LSO STATION _____

DECKEDGE STATION _____

BARRICADE _____

TOPSIDE P.O. _____

PRIMARY FLIGHT CONTROL _____

EQUIPMENT DATA

	NO. 1	NO. 2	NO. 3	NO.4	BARRICADE
RECOVERY NO.					
HITS ON P/C					
HEAVY HITS					
HITS ON CDP					
X-HEAD STOP					

CDPS ON DECK

NUM. OF MISSING BOLTS	RETRACTABLE SHEAVES		IMPACT PAD RAILS		WIRE SUPPORTS	TERMINAL TO SHEAVE	
	PORT	STBD	PORT	STBD		PORT	STBD
A/G #1							
A/G #2							
A/G #3							
A/G #4							
BARRICADE ENGINE							

A/G LPO _____ **A/G CPO** _____

MAINT. CHIEF/ OFFICER _____

Figure E-14. Arresting Gear Post-Operational Data

ARRESTING GEAR MAINTENANCE ACTION

ENGINE NO_____ DATE_____

JSN_____

HIT NO. _____ HITS SINCE LAST INSP._____

HIGH-SPEED SPACER WEAR DATA

FIXED SHEAVE ASSEMBLY

	28" SHEAVE		33" SHEAVE	
BASIC	_____	_____	_____	_____
DEPTH GAGE	_____	_____	_____	_____
FEELER GAGE	_____	_____	_____	_____
THICKNESS	_____	_____	_____	_____
WEAR	_____	_____	_____	_____
LATERAL STACK	_____	_____	_____	_____

CROSSHEAD ASSEMBLY

	28" SHEAVE		33" SHEAVE	
BASIC	_____	_____	_____	_____
DEPTH GAGE	_____	_____	_____	_____
FEELER GAGE	_____	_____	_____	_____
THICKNESS	_____	_____	_____	_____
WEAR	_____	_____	_____	_____
LATERAL STACK	_____	_____	_____	_____

NOTES:

(1) EACH MEASUREMENT SHALL BE TAKEN BY TWO PEOPLE AND RESULTS RECORDED IN COLUMNS PROVIDED.

(2) IF CALIPERS ARE USED TO MEASURE THICKNESS, DISREGARD DEPTH AND FEELER GAGE COLUMNS.

REMARKS:

MAINT. MAN_____ **A/G LPO/BRANCH CHIEF**_____

Q/A INSPECTOR_____ **MAINT. CHIEF/OFFICER**_____

Figure E-15. High-Speed Spacer Wear Data.

ARRESTING GEAR MAINTENANCE ACTION

ENGINE NO. _____ DATE _____

JSN _____

HIT NO. _____ HITS SINCE LAST INSP. _____

CABLE GUIDE WEAR DATA **CABLE GUIDE LOCATIONS**

UPPER GUIDE

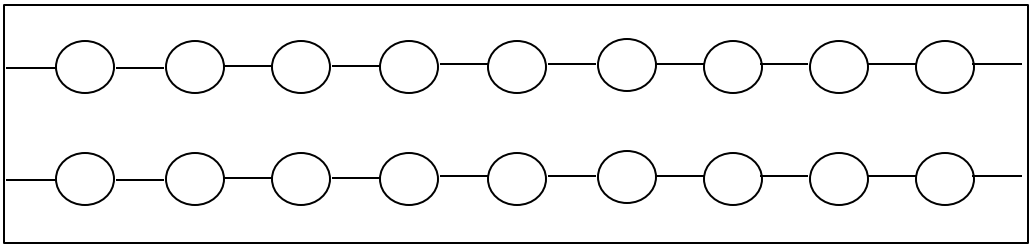

LOWER GUIDE

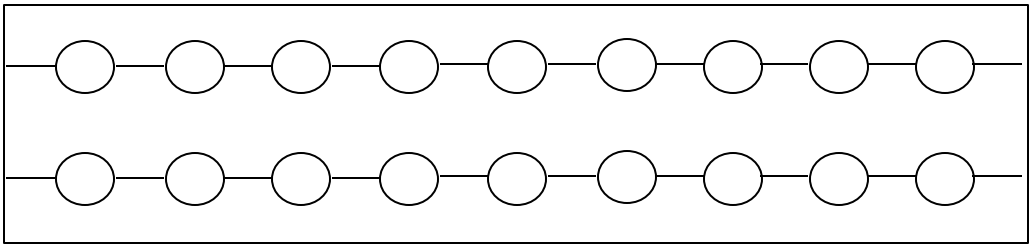

REMARKS:

MAINT. MAN _____ A/G LPO/CPO _____

Q/A INSPECTOR _____ MAINT. CPO/OFFICER _____

Figure E-16. Cable Guide Wear Data

ARRESTING GEAR MAINTENANCE ACTION

ENGINE NO. _____ DATE _____

JSN _____

HIT NO. _____ HITS SINCE LAST INSP. _____

CROV DRIVE SYSTEM PULLEY WEAR DATA

PULLEY LOCATION

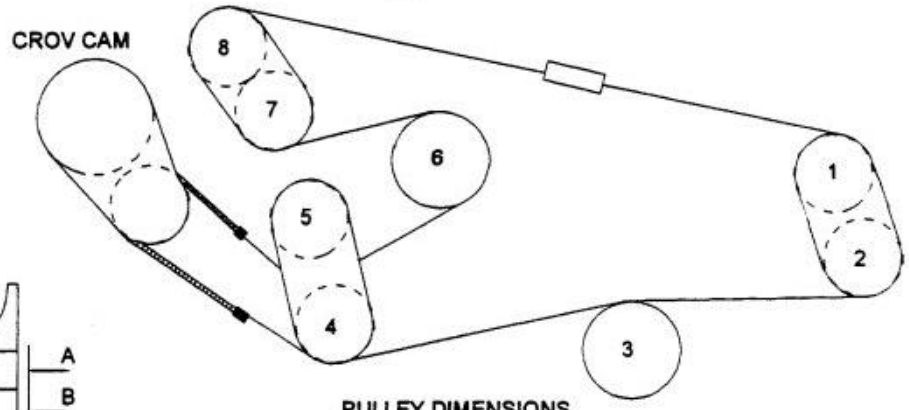

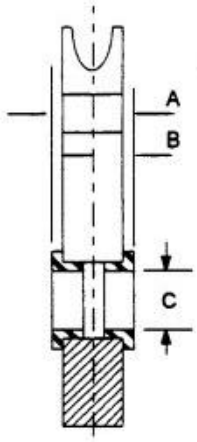

PULLEY DIMENSIONS

	NO. 1	2	3	4	5	6	7	8
A.								
B.								
C.								
GROOVE DIA.								
AXLE DIA								

NOTE: 1. "A" IS BRACKET TO COVER DIMENSION

REMARKS:

MAINTENANCE MAN _____ A/G LPO/CPO _____

Q/A INSPECTOR _____ MAINT. CPO/OFFICER _____

Figure E-17. CROV Drive System Pulley Wear Data

ARRESTING GEAR MAINTENANCE ACTION

ENGINE NO. _____ **DATE** _____

JSN _____

HIT NO. _____ **HITS SINCE LAST INSPECTION** _____

ANCHOR DAMPER SLIPPER CLEARANCES

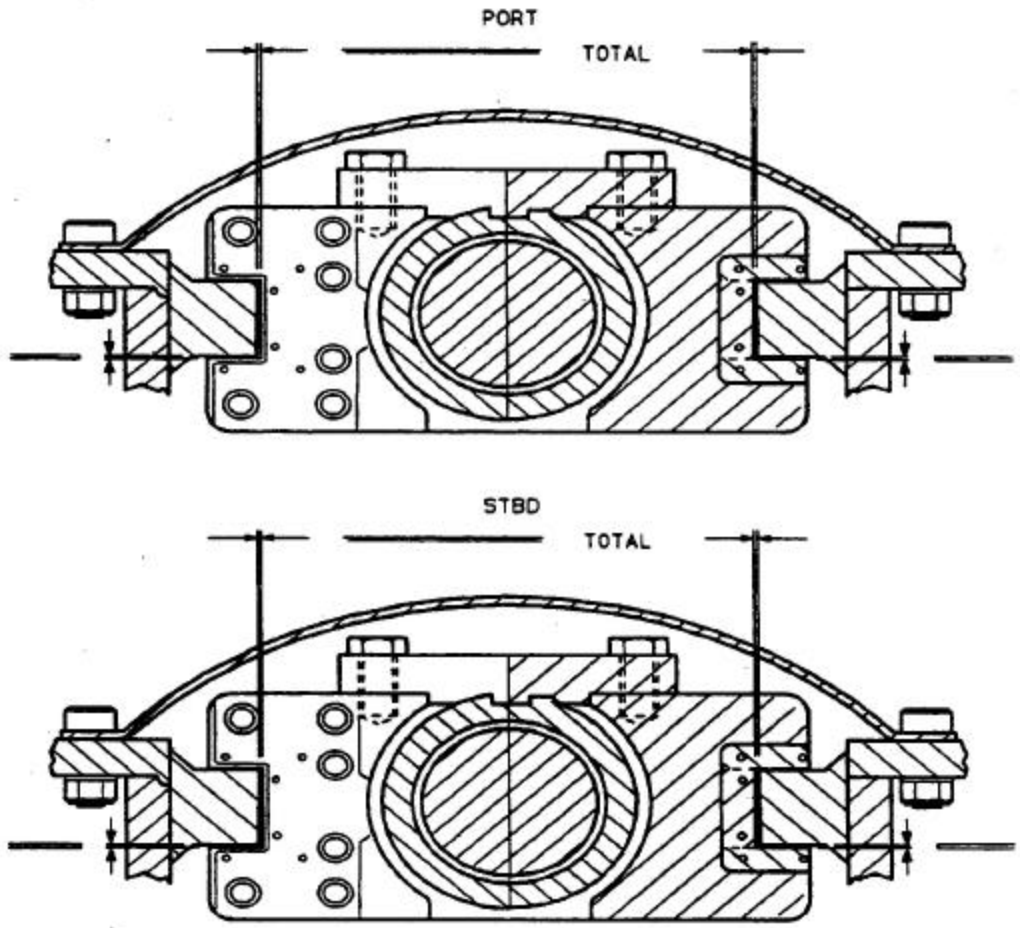

REMARKS:

MAINTENANCE MAN _____ **A/G LPO/CPO** _____

Q/A INSPECTOR _____ **MAINT. CPO/OFFICER** _____

Figure E-18. Anchor Damper Slipper Clearances

ARRESTING GEAR MAINTENANCE ACTION

ENGINE NO. _____ DATE _____

JSN _____

HIT NO. _____ HITS SINCE LAST INSP. _____

CROSSHEAD SLIPPER CLEARANCES

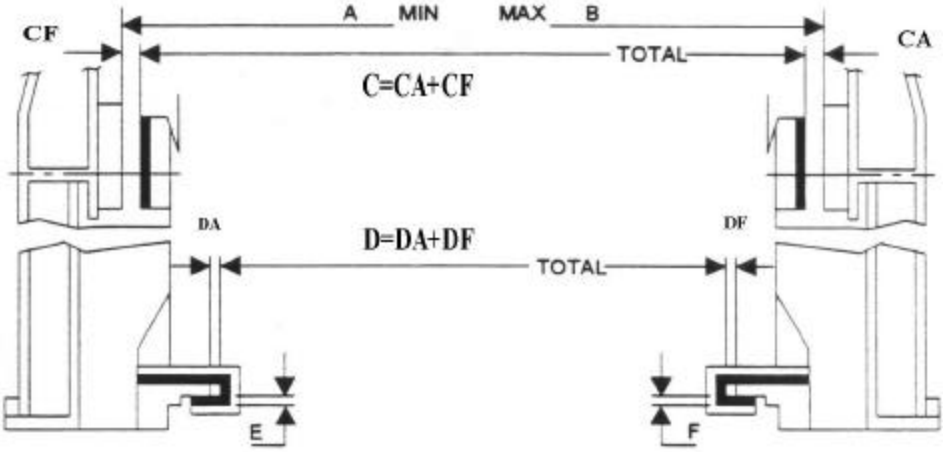

RAIL SPAN READINGS

1)_____ 2)_____ 3)_____ 4)_____ 5)_____

TRACK SPAN READINGS

1)_____ 2)_____ 3)_____ 4)_____ 5)_____

MEC END

CA _____ IN. CF _____ IN. C _____ IN.

DA _____ IN. DF _____ IN. D _____ IN.

E _____ IN. F _____ IN.

X-HEAD STOP END

CA _____ IN. CF _____ IN. C _____ IN.

DA _____ IN. DF _____ IN. D _____ IN.

E _____ IN. F _____ IN.

REMARKS:

MAINTENANCE MAN _____ A/G LPO/CPO _____

Q/A INSPECTOR _____ MAINT. CPO/OFFICER _____

Figure E-19. Crosshead Slipper Clearances

ARRESTING GEAR MAINTENANCE ACTION

ENGINE NO. _____ **DATE** _____

JSN _____

HIT NO. _____ **HITS SINCE LAST INSPECTION** _____

SHEAVE DAMPER SLIPPER CLEARANCES

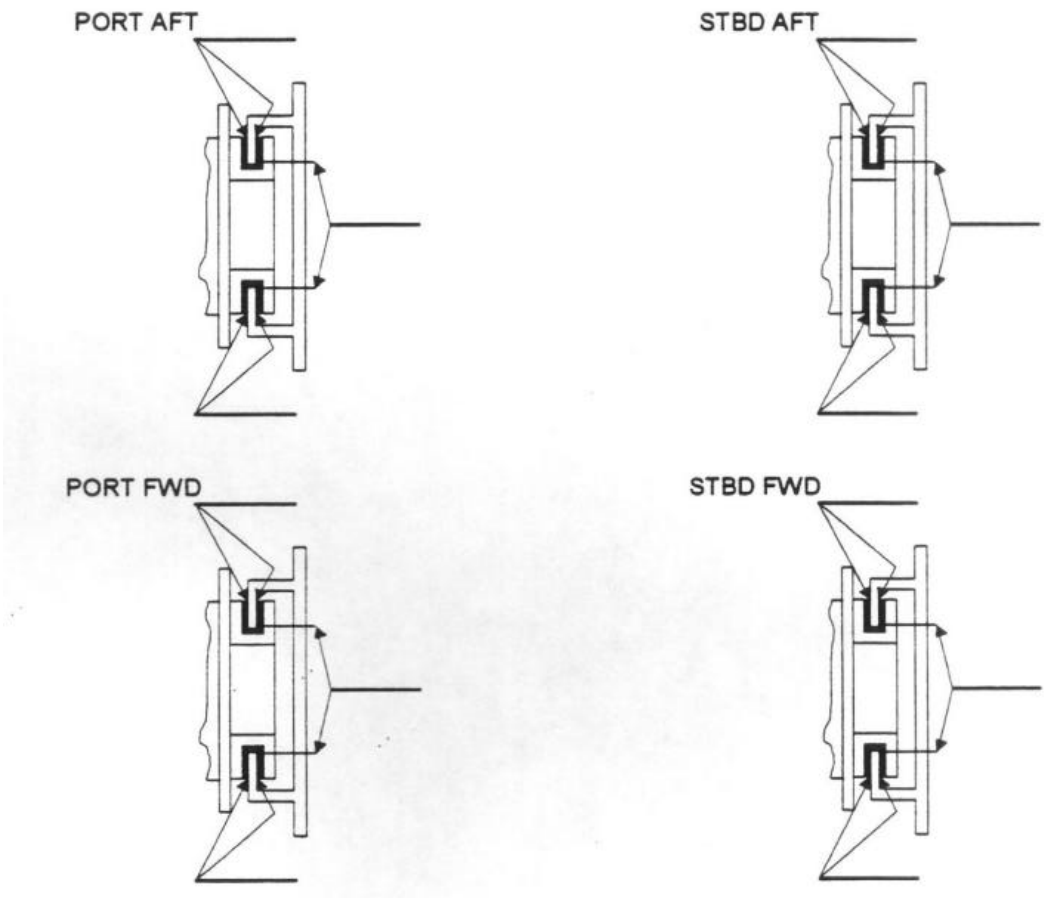

REMARKS:

MAINTENANCE MAN _____ **A/G LPO/CPO** _____

Q/A INSPECTOR _____**MAINT. CPO/OFFICER** _____

Figure E-20. Sheave Damper Slipper Clearance

ARRESTING GEAR MAINTENANCE ACTION

ENGINE NO. _____ **DATE** _____

JSN _____

HIT NO. _____ **HITS SINCE LAST INSPECTION** _____

ENGINE SHEAVE WEAR DATA **FLIGHT DECK RUNOUT** _____

X-HEAD END SHEAVE ASSEMBLY

33 INCH SHEAVE BANK

SHV#	B	1/32	1/16	3/32	1/8	5/32	3/16
1							
3							
5							
7							
9							
11							
13							
15							
17							

28 INCH SHEAVE BANK

SHV#	B	1/32	1/16	3/32	1/8	5/32	3/16
35							
33							
31							
29							
27							
25							
23							
21							
19							

FIXED END SHEAVE ASSEMBLY

33 INCH SHEAVE BANK

SHV#	B	1/32	1/16	3/32	1/8	5/32	3/16
2							
4							
6							
8							
10							
12							
14							
16							
18							

28 INCH SHEAVE BANK

SHV#	B	1/32	1/16	3/32	1/8	5/32	3/16
36							
34							
32							
30							
28							
26							
24							
22							
20							

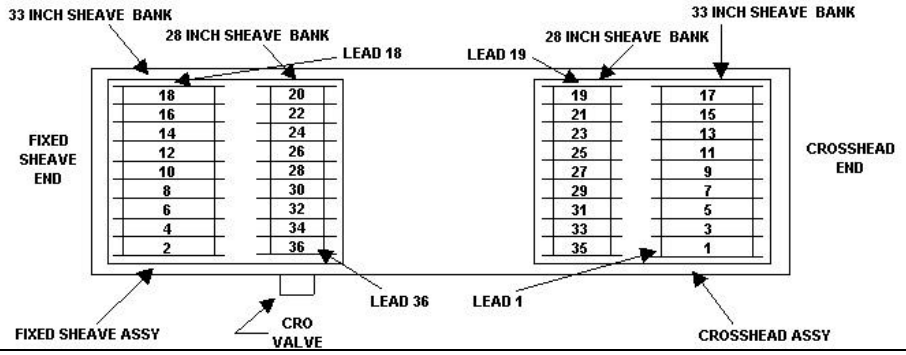

MAINTENANCE MAN _____ **A/G LPO/CPO** _____

Q/A INSPECTOR _____ **MAINT. CPO/OFFICER** _____

Figure E-21. Engine Sheave Wear Data

ARRESTING GEAR MAINTENANCE ACTION

ENGINE NO._____ **DATE**_____

JSN_____

ENGINE HIT NO._____ **HITS SINCE LAST INSPECTION**_____

SHEAVE WEAR DATA

A: SHEAVE THROAT DEPTH
B: SHEAVE SPACER READING
C: PHENOLIC SPACER THICKNESS
D: CEMENTED PHENOLIC SECURITY

SHEAVE # _____

A: _____ _____ _____ _____
B: _____ _____ _____ _____
C: _____ _____ _____ _____
D: **SAT / UNSAT**

SHEAVE # _____

A: _____ _____ _____ _____
B: _____ _____ _____ _____
C: _____ _____ _____ _____
D: **SAT /UNSAT**

SHEAVE # _____

A: _____ _____ _____ _____
B: _____ _____ _____ _____
C: _____ _____ _____ _____
D: **SAT / UNSAT**

SHEAVE # _____

A: _____ _____ _____ _____
B: _____ _____ _____ _____
C: _____ _____ _____ _____
D: **SAT /UNSAT**

SHEAVE # _____

A: _____ _____ _____ _____
B: _____ _____ _____ _____
C: _____ _____ _____ _____
D: **SAT / UNSAT**

SHEAVE # _____

A: _____ _____ _____ _____
B: _____ _____ _____ _____
C: _____ _____ _____ _____
D: **SAT /UNSAT**

SHEAVE # _____

A: _____ _____ _____ _____
B: _____ _____ _____ _____
C: _____ _____ _____ _____
D: **SAT / UNSAT**

SHEAVE # _____

A: _____ _____ _____ _____
B: _____ _____ _____ _____
C: _____ _____ _____ _____
D: **SAT /UNSAT**

REMARKS:

MAINT. MAN _____ **W/C SUPERVISOR**_____

Q/A INSPECTOR_____ **MAINT. CHIEF/OFFICER** _____

Figure E-22. Sheave Wear Data.

VLA MAINTENANCE ACTION

DATE _____ JSN_____

FRESNEL LENS, MK 6 MOD 3 ALIGNMENT, STABILIZATION AND POLE CHECK DATA

NOTE: REFER TO THE APPLICABLE MAINTENANCE REQUIREMENT CARD AND ENTER ONLY THE DATA REQUIRED FOR THE PERIODICITY INDICATED.

POWER SUPPLY DATA

+10V FOR +/-0.050 (UP TO 0.75 IS ACCEPTABLE)	15V FOR +/-0.30	+28V FOR +/-5.0
-10V FOR +/-0.050 (UP TO 0.75 IS ACCEPTABLE)	15V FOR +/-0.30	-28V FOR +/-5.0

BASIC ANGLE DATA

NOTE: PITCH AND ROLL SYNCHROS SET 0.000+/- 0.005 VDC

POLE LOC	B/A SET	POLE HEIGHT (+/-1.0 IN)			RESP METER READING COMPUTER #1			(+/-3.0 MIN) COMPUTER #2	
FT	DEG	IDEAL	ACTUAL	ERROR	IDEAL	ACTUAL	ERROR	ACTUAL	ERROR
DAILY									
79	3.5				3 30'				
79	3.75				3 45'				
69	4.00				4 00'				
WEEKLY									
79	3.00				3 00'				
79	3.50				3 30'				
79	3.75				4 45'				
69	4.00				4 00'				
69	4.25				4 15'				
69	4.50				4 30'				

MAINT. MAN _____ **BRANCH LPO/CHIEF** _____

Q/A INSPECTOR _____ **MAINT. CHIEF/OFFICER** _____

Figure E-23. Fresnel Lens, MK 6 MOD 3 Alignment, Stabilization and Pole Check Data (Sheet 1 of 5)

VLA MAINTENANCE ACTION

DATE _____ JSN _____

FRESNEL LENS, MK 6 MOD 3 ALIGNMENT, STABILIZATION AND POLE CHECK DATA

NOTE: REFER TO THE APPLICABLE MAINTENANCE REQUIREMENT CARD AND ENTER ONLY THE DATA REQUIRED FOR THE PERIODICITY INDICATED.

HOOK TO EYE DISTANCE DATA

	(DAILY/WEEKLY/SEMIANNUALLY)					(SEMIANNUALLY)				
HOOK TO EYE SET	RESP METER READING (+/-6.0 MIN)					POLE HEIGHT (+/-6.0 IN)				
	COMPUTER #1			COMPUTER #2		COMPUTER #1			COMPUTER #2	
	IDEAL	ACTUAL	ERROR	ACTUAL	ERROR	IDEAL	ACTUAL	ERROR	ACTUAL	ERROR
12.0										
12.0										
14.5										
15.0										
15.0										
15.0										
16.3										
16.7										
16.8										
17.15										
18.8										
19.7										
NON-STD 20.0										

LOW (RED) CELL VISIBILITY DATA (QUARTERLY)

		RESPONSE METER		POLE LOCATION		POLE HEIGHT
L1	L2	PITCH	ROLL	X	Y	Z
		2 30'	-5 0'		250 FT	

MAINT. MAN _____ BRANCH LPO/CHIEF_____

Q/A INSPECTOR _____ MAINT. CHIEF/OFFICER_____

Figure E-24. Fresnel Lens, MK 6 MOD 3 Alignment, Stabilization and Pole Check Data (Sheet 2 of 5)

VLA MAINTENANCE ACTION

DATE _____ JSN _____

FRESNEL LENS, MK 6 MOD 3 ALIGNMENT, STABILIZATION AND POLE CHECK DATA

NOTE: REFER TO THE APPLICABLE MAINTENANCE REQUIREMENT CARD AND ENTER ONLY THE DATA REQUIRED FOR THE PERIODICITY INDICATED.

LINE MODE COMPUTER RESPONSE METER DATA (DAILY/WEEKLY)

COMPUTER NO. 1

DC VOLTS +/-0.005		POLE HEIGHT @ 70' (TOL +/-1.50 IN)			RESP METER READING					
					PITCH (+/-3.0 MIN)			ROLL (+/-6.0 MIN)		
PITCH	ROLL	IDEAL	ACTUAL	ERROR	IDEAL	ACTUAL	ERROR	IDEAL	ACTUAL	ERROR
0.000	0.000									
0.000	-1.500									
0.000	+1.500									
+1.000	0.000									
+1.000	-1.500									
+1.000	+1.500									
-1.000	0.000									
-1.000	-1.500									
-1.000	+1.500									

DC VOLTS +/-0.005		POLE HEIGHT @ 80' (TOL +/-1.75 IN)			RESP METER READING					
					PITCH (+/-3.0 MIN)			ROLL (+/-6.0 MIN)		
PITCH	ROLL	IDEAL	ACTUAL	ERROR	IDEAL	ACTUAL	ERROR	IDEAL	ACTUAL	ERROR
.000	0.000									
0.000	-1.500									
0.000	+1.500									
+1.000	0.000									
+1.000	-1.500									
+1.000	+1.500									
-1.000	0.000									
-1.000	-1.500									
-1.000	+1.500									

MAINT. MAN _____ BRANCH LPO/CHIEF_____

Q/A INSPECTOR _____ MAINT. CHIEF/OFFICER_____

Figure E-25. Fresnel Lens, MK 6 MOD 3 Alignment, Stabilization and Pole Check Data (Sheet 3 of 5)

VLA MAINTENANCE ACTION

DATE _____ JSN _____

FRESNEL LENS, MK 6 MOD 3 ALIGNMENT, STABILIZATION AND POLE CHECK DATA

NOTE: REFER TO THE APPLICABLE MAINTENANCE REQUIREMENT CARD AND ENTER ONLY THE DATA REQUIRED FOR THE PERIODICITY INDICATED.

LINE MODE COMPUTER RESPONSE METER DATA (DAILY/WEEKLY)

COMPUTER NO. 2

DC VOLTS +/-0.005		POLE HEIGHT @ 70' (TOL +/-1.50 IN)			RESP METER READING					
					PITCH (+/-3.0 MIN)			ROLL (+/-6.0 MIN)		
PITCH	ROLL	IDEAL	ACTUAL	ERROR	IDEAL	ACTUAL	ERROR	IDEAL	ACTUAL	ERROR
0.000	0.000									
0.000	-1.500									
0.000	+1.500									
+1.000	0.000									
+1.000	-1.500									
+1.000	+1.500									
-1.000	0.000									
-1.000	-1.500									
-1.000	+1.500									

DC VOLTS +/-0.005		POLE HEIGHT @ 80' (TOL +/-1.75 IN)			RESP METER READING					
					PITCH (+/-3.0 MIN)			ROLL (+/-6.0 MIN)		
PITCH	ROLL	IDEAL	ACTUAL	ERROR	IDEAL	ACTUAL	ERROR	IDEAL	ACTUAL	ERROR
0.000	0.000									
0.000	-1.500									
0.000	+1.500									
+1.000	0.000									
+1.000	-1.500									
+1.000	+1.500									
-1.000	0.000									
-1.000	-1.500									
-1.000	+1.500									

MAINT. MAN _____ BRANCH LPO/CHIEF_____

Q/A INSPECTOR _____ MAINT. CHIEF/OFFICER_____

Figure E-26. Fresnel Lens, MK 6 MOD 3 Alignment, Stabilization and Pole Check Data (Sheet 4 of 5)

VLA MAINTENANCE ACTION

DATE _____ JSN _____

FRESNEL LENS, MK 6 MOD 3 ALIGNMENT, STABILIZATION AND POLE CHECK DATA

NOTE: REFER TO THE APPLICABLE MAINTENANCE REQUIREMENT CARD AND ENTER ONLY THE DATA REQUIRED FOR THE PERIODICITY INDICATED.

TRIM RESPONSE DATA

DAILY

DC VOLTS +/-0.005		RESPONSE METER READING (TOL 3.0 MIN PITCH; 6.0 MIN ROLL)									
		COMPUTER #1						COMPUTER #2			
		PITCH			ROLL			PITCH		ROLL	
PITCH	ROLL	IDEAL	ACTUAL	ERROR	IDEAL	ACTUAL	ERROR	IDEAL	ERROR	ACTUAL	ERROR
0.000	0.000										
0.000	-1.500										
0.000	+1.500										
+1.000	0.000										
-1.000	- 0.000										

WEEKLY

DC VOLTS +/-0.005		RESPONSE METER READING (TOL 3.0 MIN PITCH; 6.0 MIN ROLL)									
		COMPUTER #1						COMPUTER #2			
		PITCH			ROLL			PITCH		ROLL	
PITCH	ROLL	IDEAL	ACTUAL	ERROR	IDEAL	ACTUAL	ERROR	IDEAL	ERROR	ACTUAL	ERROR
0.000	0.000										
0.000	-1.500										
0.000	+1.500										
+1.000	0.000										
+1.000	-1.500										
+1.000	+1.500										
-1.000	+1.000										
-1.000	-1.500										
-1.000	+1.500										

MAINT. MAN _____ BRANCH LPO/CHIEF_____

Q/A INSPECTOR _____ MAINT. CHIEF/OFFICER_____

Figure E-27. Fresnel Lens, MK 6 MOD 3 Alignment, Stabilization and Pole Check Data (Sheet 5 of 5)

IFLOLS MK 13 MOD 0 POLE CHECK DATA

DATE _____ **TIME** _____

CONFIGURATION	LOCATION	POLE HEIGHT	POLE RANGE	POLE LOW	POLE HIGH	POLE ACTUAL
3	L3	69.7	68.0 – 71.3			
4	L2	65.6	63.9 – 67.3			
5	L2	69.2	68.5 – 70.9			
6	L4	47.1	45.4 – 48.8			
7	L5	51.5	49.8 – 53.2			
8	L4	55.7	54.0 – 57.4			
9	L5	42.0	40.3 – 43.7			
10	L4	55.6	53.9 – 57.3			
11	L5	58.7	57.0 – 60.4			
12	L4	49.5	47.8 – 51.2			
13	L5	55.9	54.2 – 57.6			
14	L4	47.2	45.5 – 48.9			

LSO R-1 ☐ YES ☐ NO SIGNATURE _____

LSOD-1R ☐ YES ☐ NO SIGNATURE _____

IFLOS D-3R ☐ YES ☐ NO SIGNATURE _____

IFLOS R-1D ☐ YES ☐ NO SIGNATURE _____

IFLOS R-2D ☐ YES ☐ NO SIGNATURE _____

IFLOS R-2D ☐ YES ☐ NO SIGNATURE _____

IFLOS ☐ UP ☐ DOWN

LSO HUD ☐ UP ☐ DOWN ELAPSE TIME METER _____

MOVLAS ☐ UP ☐ DOWN

W/C SUPERVISOR _____ **BRANCH LCPO/LPO** _____

QA INSPECTOR _____ **MAINT. CPO/OFFICER** _____

Figure 28. IFLOLS MK 13 MOD 0 Pole Check Data/ LSO-IFLOLS Pre-Op Data